TRIDENT

1 instrument, 3 methods for

Thermal Conductivity (*k*)

(It's better to have options.)

Conforms to ASTM D7984, D5334, D5930, ISO 22007-2 and GB/T 32064

APPLICATIONS

The Trident platform allows for thermal conductivity testing of a wide range of solids, liquids, powders and pastes.

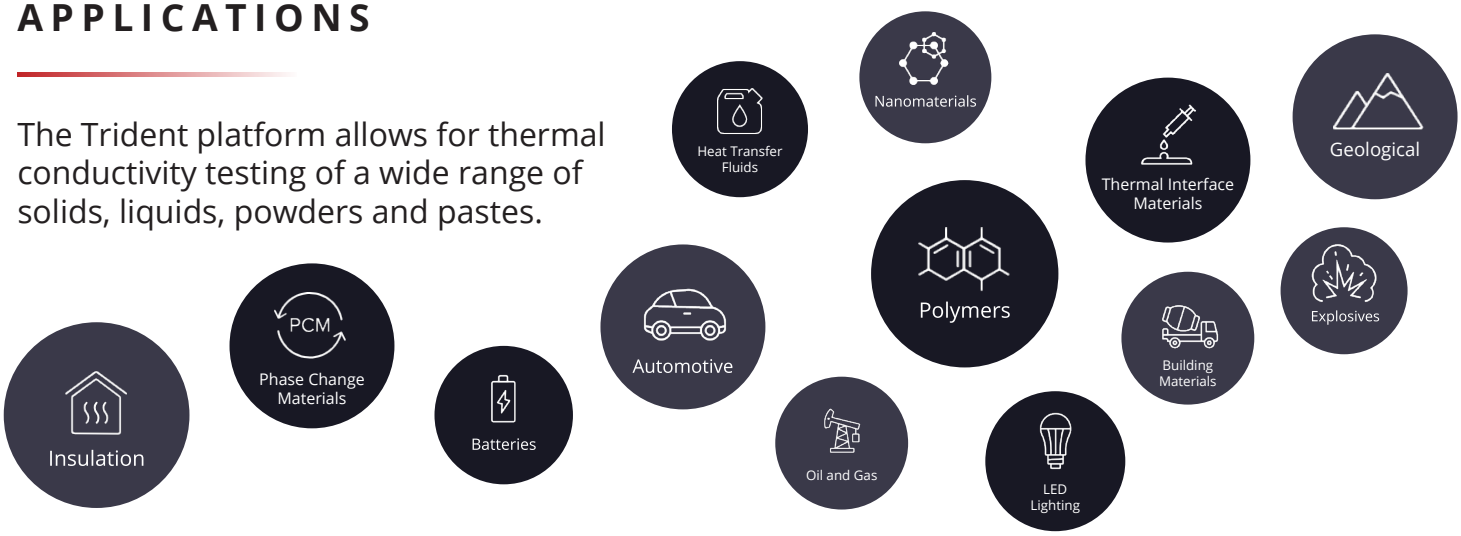

TESTIMONIALS

We purchased the C-Therm Thermal Conductivity Analyzer after seeing a demonstration of how fast and easy it is to operate. The instrument provides unequivocal results and provides the flexibility to test powders and liquids. In terms of our satisfaction with the purchase, I'd give it a 10 out of 10 – extremely satisfied.

Dr. Enrique Jackson (Sector: Aerospace)
NASA

The C-Therm Thermal Conductivity Analyzer has provided our group a fast, accurate capability to test the thermal conductivity of our polymers with C-Therm's patented high-precision MTPS sensor. The instrument has become very popular within our group for its quick easy reliable measurement and the support from C-Therm has exceeded our expectations. We recently upgraded the unit with the new robust TLS module for work on polymer melts.

Jose Fonseca, Expert Thermodynamics (Sector: Polymers)
Covestro

Using the Trident system for thermal conductivity testing of our process safety studies and related contract testing has provided our lab with invaluable new capabilities, with great support from the team at C-Therm.

Delphine Berset (Sector: Process Safety)
TÜV SÜD

The C-Therm system has been a key piece of testing equipment at Haydale, providing fast and accurate thermal conductivity measurements for our product development of nanocomposites. Having this capability has allowed a better understanding of the dispersion of nanomaterials in polymer matrices through thermal mapping sample surfaces. The support and customer service from C-Therm has been excellent over the years, we look forward to dealing with them again in the near future.

Stuart Sykes (Sector: Nanocomposites)
Haydale Composites Solutions Ltd.

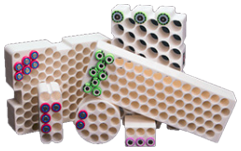

The system is housed in our Golden facility and does most of the heavy lifting for our LHS® industrial product development and production QC for standard thermal conductivity measurements. The machine has been working fine.

Mark Hartmann, Chief Technology Officer, (Sector: Phase Change Materials)
Outlast Technologies

3 METHODS OF OPERATION

"When all you have is a hammer, everything looks like a nail." The adage rings true in thermal conductivity characterization. It's better to have options. Trident unleashes the power of three different transient methods with the ultimate toolbox for thermal conductivity measurement. MTPS, TPS and TLS all in one modular package. Choose the right tool for your samples. Choice is good.

MTPS

Fast, easy and highly accurate. A single-sided, "plug & play" sensor suitable for testing solids, liquids, powders and pastes. Offers maximum sample versatility. Conforms to ASTM D7984.

FLEX TPS

A flexible double-sided sensor available in different sizes. Greater control over experimental parameters makes TPS ideal for more advanced users. Conforms to ISO 22007-2 and GB/T 32064.

TLS NEEDLE

Sheathed in stainless steel, the TLS Needle sensor offers maximum robustness in thermal conductivity testing of polymer melts and aggregate samples. Conforms to ASTM D5334 and D5930.

MODIFIED TRANSIENT PLANE SOURCE (MTPS)

Simple and precise. The MTPS method employs a single-sided sensor to directly measure thermal conductivity and effusivity of materials. The MTPS method has the highest precision, highest sensitivity, shortest test time, and is the easiest to use among all three techniques.

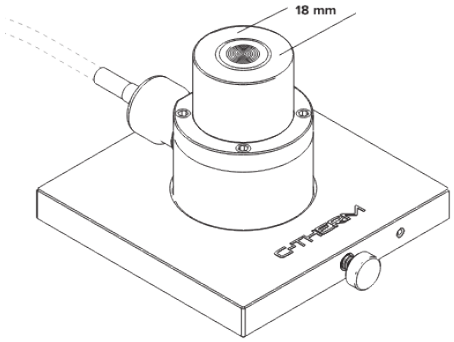

Principles of Operation

Trident's primary sensor employs the Modified Transient Plane Source (MTPS) technique in characterizing the thermal conductivity and effusivity of materials. It employs a single-sided, interfacial heat reflectance sensor that applies a momentary constant heat source to the sample. Typically, the measurement pulse is between 1 to 3 seconds. Thermal conductivity and effusivity are measured directly, providing a detailed overview of the heat transfer properties of the sample material.

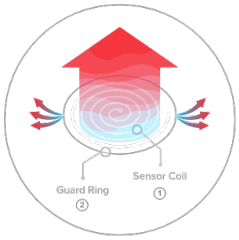

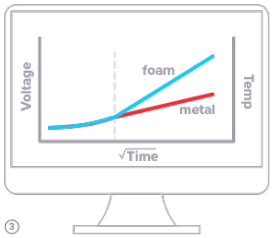

How it Works

1. A known current is applied to the sensor's spiral heating element, providing a small amount of heat.

2. A guard ring surrounds the sensor coil to support a one-dimensional heat transfer into the sample. The applied current results in a rise in temperature at the interface between the sensor and the sample, which induces a change in the voltage drop of the sensor element.

3. The rate of increase in the sensor voltage is used to determine the thermal properties of the sample. The voltage is factory-calibrated to temperature. The thermal conductivity is inversely proportional to the rate of increase in the temperature at the point of contact between the sensor and the sample. The voltage is used as a proxy for temperature and will rise more steeply when lower thermal conductivity materials (e.g. foam) are tested. Conversely, the voltage slope will be flatter for higher thermal conductivity materials (e.g. metal). With the C-Therm Trident, tabular thermal conductivity results are reported in real-time making thermal conductivity measurement fast and easy. No regression analysis is required.

TRANSIENT PLANE SOURCE (TPS) FLEX

The TPS method employs a double-sided sensor to determine thermal conductivity. Recommended for more experienced users, TPS provides the greatest flexibility and control over experimental parameters (e.g. test time & power) and avoids the use of any contact agents.

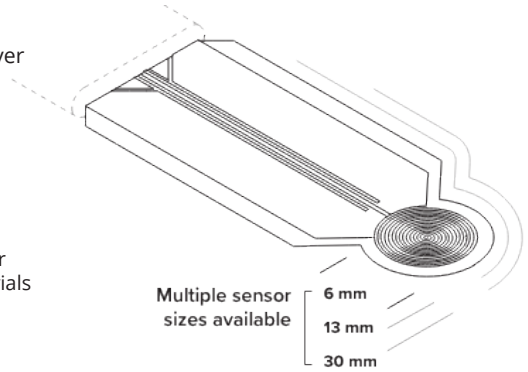

Principle of Operation

The C-Therm Trident Thermal Conductivity Analyzer Flex configuration employs the Transient Plane Source (TPS) technique for characterizing the thermal conductivity and diffusivity of materials, conforming to ISO Standard 22007-2 and GB/T 32064. It employs a double-sided sensor, and the user iteratively develops the timing and power parameters. Intended for rough and heterogeneous materials not well-suited to a single-sided test method, this configuration allows researchers the maximum versatility in test parameters and experimental design.

How it Works

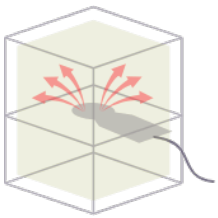

1 Power is applied to the sensor's spiral heating element, providing a small amount of heat. This results in a rise in temperature at the interface between the sensor and the sample, which induces a voltage change across the sensor element.

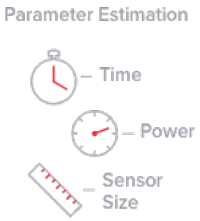

2 The results from the initial scouting run are used to estimate test time, power level, and ideal sensor size. The experiment is run with the new parameters. This is repeated until the correct parameters are identified. Guidance is provided in the ISO 22007-2.

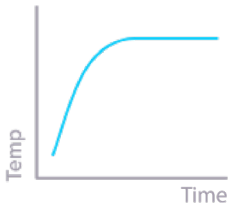

3 The test result is a plot of temperature vs time.

4 The results are analyzed with an iterative solving procedure to generate thermal property data such as thermal diffusivity and thermal conductivity.

TRANSIENT LINE SOURCE (TLS) NEEDLE

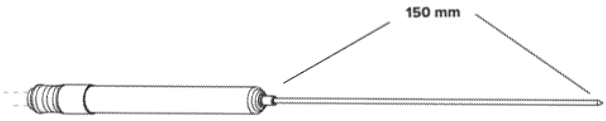

The TLS method employs a needle probe to characterize the thermal conductivity of viscous and granular materials. It is the most robust sensor for thermal conductivity testing.

Principles of Operation

The Transient Line Source technique operates in accordance with ASTM D5334, D5930 and IEEE Std 442. Commonly referred to as a needle probe, the TLS sensor provide a robust and efficient solution for measuring the thermal conductivity of granular materials, powders, polymer melts, soils, slurries, gels, and pastes.

This technique involves placing an electrically heated needle into a material. The heat flows out radially from the needle into the sample. During heating, the temperature difference between a thermocouple (T1) positioned in the middle of the heating wire, and a second thermocouple (T2) located at the tip of the needle is measured. By plotting this temperature difference versus the logarithm of time, thermal conductivity can be calculated. Typically, the measurement is on the order of 2 to 10 minutes.

How it Works

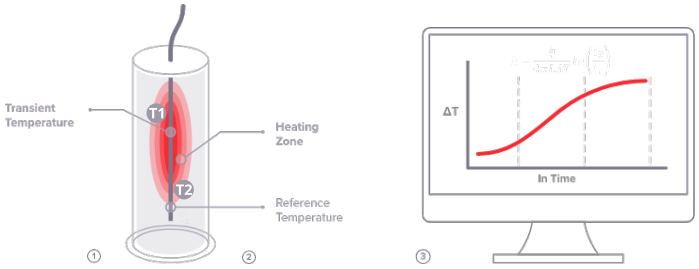

1. An internal platinum wire is heated electrically – providing a known amount of heat per unit length.
2. The temperatures are measured at locations T1 (located in the middle of the heating wire) and T2 (located at the tip of the needle).
3. The rate of increase in delta temperature difference as a function of logarithmic time is then used to calculate the thermal conductivity of the sample. The slope of the line is inversely proportional to the thermal conductivity of the sample. The temperature will rise more steeply when lower thermal conductivity materials (e.g. powders) are tested.

SOFTWARE

C-Therm software is developed for the Trident system to control all 3 test methods. The software is user-friendly and easy to navigate. It provides full data acquisition and analysis in one software.

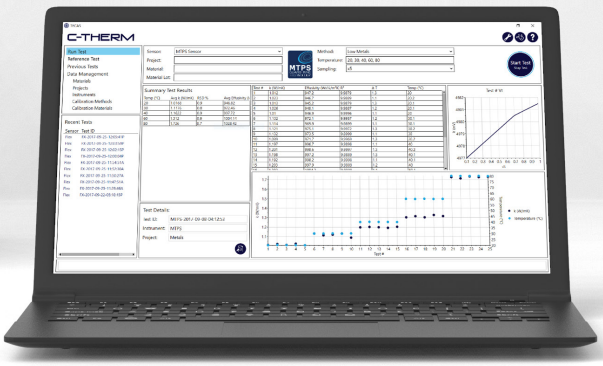

ACCESSORIES

Controlling environmental factors during testing is critical to gaining meaningful, repeatable and comparable thermal conductivity results. With C-Therm's line of accessories, precise control of temperature, compression, pressure and humidity is possible – with a wide range of accessories available.

Replacement Sensors

Thermal Chamber

Liquid & Powder Cell

Compression Test Accessory

High Pressure Cell

Reference Materials

SPECIFICATIONS

Test Method	Modified Transient Plane Source	Transient Plane Source	Transient Line Source
Recommended Applications	Aerogels, Automotive, Batteries, Composites, Insulation, Explosives, Geological, Liquids, Metals, Nanomaterials, Metal Hydrides, Nuclear, Phase Change Materials (PCMs), Polymers, Rubber, Thermal Interface Materials (TIMs), Thermoelectrics	Cement/Concrete, Porous Ceramics, Polymers (Not suitable for open-celled foams or fluids)	Polymer Melts, Semi-Solids, Soil (Not suitable for lower viscosity fluids due to convection)
Thermal Conductivity Range	0 to 500 W/mK	0.03 to 2000 W/mK	0.1 to 6 W/mK
Thermal Diffusivity Range	0 to 300 mm^2/s*	0.01 to 1200 mm^2/s	N/A
Heat Capacity Range	Up to 5 MJ/m^3K*	0.1 to 5 MJ/m^3K*	N/A
Thermal Effusivity Range	5 to 40,000 $Ws^{1/2}/m^2K$	N/A	N/A
Temperature Range	-50 °C to 200 °C With option to extend to 500 °C	-50 °C to 300 °C	-55 °C to 200 °C
Precision	Better than 1%	Better than 2%	Better than 3%
Accuracy	Better than 5%	Better than 5%	± (3% + 0.02) W/mK
Test Time	0.8 to 3 seconds	10 to 180 seconds	1 to 4 minutes
Sensor Size	18 mm diameter	6 mm, 13 mm and 30 mm diameter sensors available	150 mm length
Minimum Sample Size	**Solids**: Minimum diameter of 18 mm. Minimum thickness is dependent on thermal conductivity. For materials under 1 W/mK a min. thickness of 1 mm is suggested. **Liquids & Powders**: 1.25 mL	Requires two identical samples. The diameter of the samples must be 2.5X sensor diameter. Thickness must be at minimum the same as the sensor diameter.	80 mL
Maximum Sample Size	Unlimited	Unlimited	Unlimited
International Standards	ASTM D7984	ISO 22007-2, GB/T 32064	ASTM D5334, D5930, IEEE 442

*Calculated

COMPANIES AND ORGANIZATIONS USING C-THERM'S PATENTED TECHNOLOGY:

NASA
University of California
TÜV SÜD
adidas
FedEx
Haydale Composites
Philips
NIST
Avery
3M
Philip Morris
US Navy
Bureau Veritas
Universidade de Aveiro
Raytheon
China University of Petroleum
Engelhard
Universidade Federal de Santa Caterina
NIT Silchar
Stowe Woodward
Shanghai Polytechnic University
Dow Corning
Exxon Mobil
Hewlett Packard
National Research Council
Liberec University
National University of Singapore
Petrobas
Henkel
Nanocomposix
Canadian Explosives
Research Lab
Chinese Academy of Sciences
Lenovo

PROVEN

For over two decades, C-Therm's innovative sensor technology has been pioneering the way for many of the world's most prominent manufacturers, research facilities, and academic institutions to test and measure thermal properties of materials.

The technology behind Trident represents a paradigm shift in thermal conductivity measurement and earned the inventor behind the technology the Manning Innovation Principle Award and an R&D 100 Award. These coveted awards are given to the top global innovators, and place C-Therm in the distinguished company of such other winners as the developers of the ATM, Polaroid™ and anti-lock brakes.

Since its launch, C-Therm's unique technology has evolved to new levels of accuracy, speed and flexibility. Today, it is being used around the globe for R&D, quality control, and on-line production monitoring in a wide range of industries.

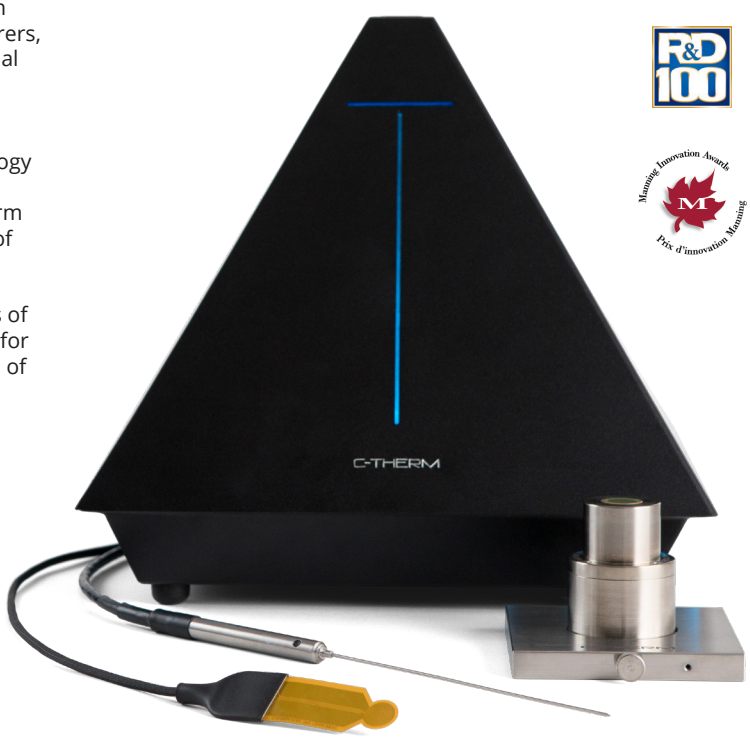

C-THERM

NORTH AMERICA: **1-877-827-7623**
INTERNATIONAL: **1-506-457-1515**

info@ctherm.com
www.ctherm.com